PHYWE excellence in science

Recording timer

11607.00

PHYWE Systeme GmbH & Co. KG
Robert-Bosch-Breite 10
D-37079 Göttingen

Phone +49 (0) 551 604-0
Fax +49 (0) 551 604-107
E-mail info@phywe.de
Internet www.phywe.de

Operating instructions

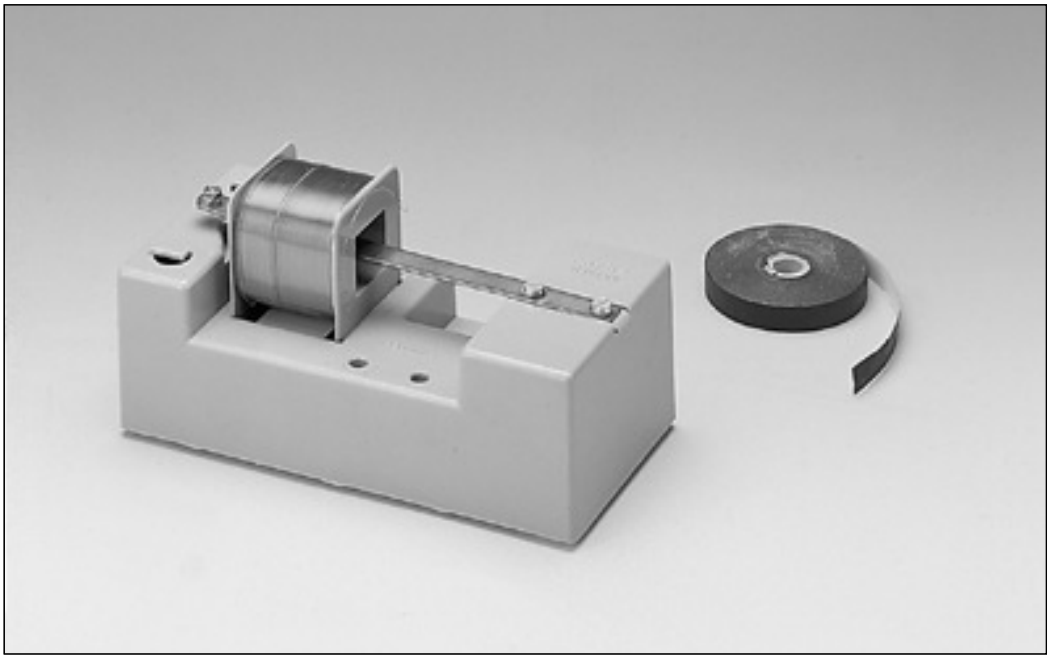

Fig. 1: Recording timer 11607.00.

1 SAFETY PRECAUTIONS

- Carefully read these operating instructions completely before operating this instrument. This is necessary to avoid damage to it, as well as for user-safety.
- Only use the instrument in dry rooms in which there is no risk of explosion.
- Do not start up this instrument in case of visible signs of damage to it .
- Only use the instrument for the purpose for which it was designed.

2 PURPOSE AND DESCRIPTION

The recording timer is used for recording straight linear movements.
A leaf spring with a plotting pen is periodically reverse magnetised by a coil supplied by alternating current (operating voltage 6 VAC/0.8 A). As a result the spring is attracted and repelled by a magnet positioned below the spring. The shape of the spring has been chosen so that it resonates at a frequency of 50 Hz. The plotting pen therefore marks timing points (measurement points) at constant 0.02 second intervals on the recording tape which is transported by the measurement object. The 50 Hz mains frequency ($\Delta t = 1//f$) which is used as a timing standard ensures accurate and constant time intervals.
The velocity and acceleration values to be measured can be determined from the marking point intervals on the special carbon-coated recording tape. A measuring point interval of 1 mm, for example, corresponds to a velocity of 5 cm/s.

3 HANDLING

The siting and mounting of the recording timer should be arranged such that the recording trace can be pulled smoothly and without friction through the guide arms by the measurement object. With track experiments the recording timer is placed on the experiment bench at the beginning of the track (Fig. 2); with a free fall experiment it is attached with a double bushing to a stand support (Fig. 3). The recording tape is cut to suitable lengths from the roll and is threaded through the guide arms with the white side facing the recording pen and then attached to the measurement object using adhesive tape if necessary.

To carry out the measurement, the operating voltage is switched on and a few seconds must then pass for the spring to reach the resonant state. The operating voltage should not be applied for longer than 20 minutes so as to avoid impermissible coil heating. For evaluation, the recording tape is laid out smooth on a flat surface, the measurement points are numbered and their intervals measured with a ruler. Avoid creating confusing additional marks on the tape due to mechanical handling.

Note:
When the mains frequency is 60 Hz, as is the case in many countries, the marking pin makes contact at time intervals of 1/60 of a second. This must be taken into consideration in the calculation of the speed from the distance between measured points.
In addition, as the geometry of the spring is not designed for 60 Hz, the lock nut must be undone and the marking pin turned further down so that it can make contact with the recording tape.

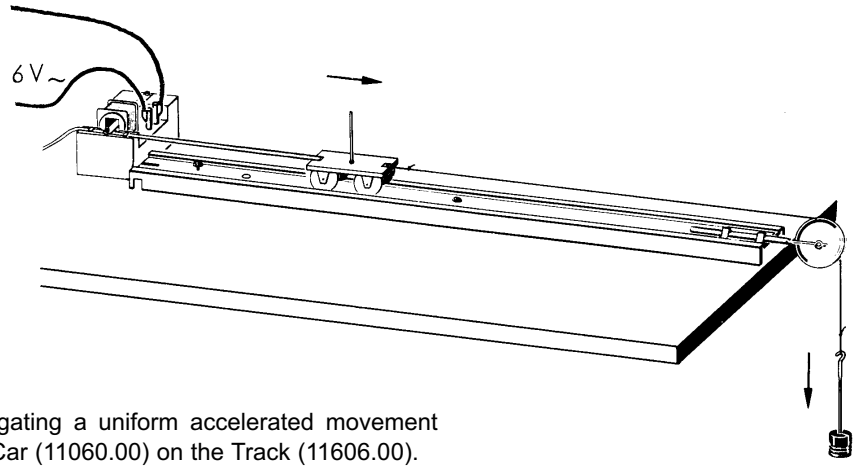

Fig. 2: Apparatus for investigating a uniform accelerated movement with the Experiment Car (11060.00) on the Track (11606.00).

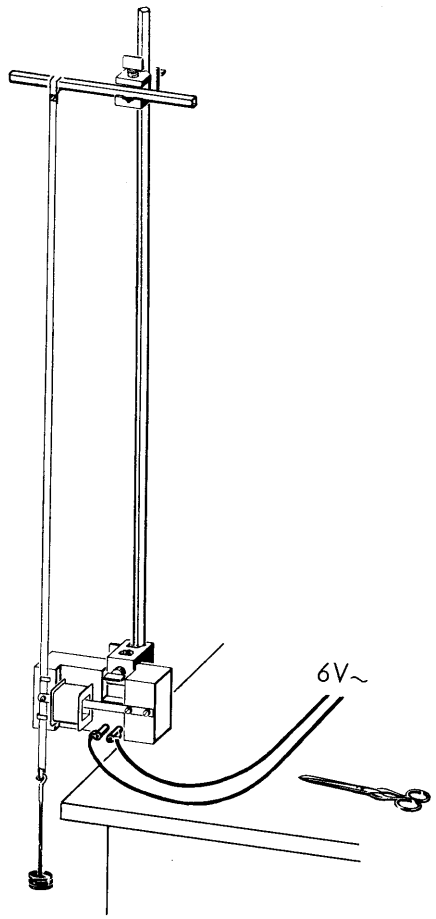

Fig. 3: Apparatus for investigating a free fall.

4 MATERIAL

Recording tape, 10 mm wide	11607.01

Suitable power supplies:

Lamp transformer, 6 VAC	07473.93
Multitap transf.,14 VAC/12 VDC, 5 A	13533.93
Power supply var.15 VAC/12 VDC/5 A	13530.93
Power supply 0...12 VDC/6 V, 12 VAC	13505.93

5 NOTES ON THE GUARANTEE

We guarantee the instrument supplied by us for a period of 24 months within the EU, or for 12 months outside of the EU. Excepted from the guarantee are damages that result from disregarding the Operating Instructions, from improper handling of the instrument or from natural wear.
The manufacturer can only be held responsible for the function and technical safety characteristics of the instrument, when maintenance, repairs and alterations to the instrument are only carried out by the manufacturer or by personnel who have been explicitly authorized by him to do so.

6 WASTE DISPOSAL

The packaging consists predominately of environmentally compatible materials that can be passed on for disposal by the local recycling service.

Should you no longer require this product, do not dispose of it with the household refuse. Please return it to the address below for proper waste disposal.

PHYWE Systeme GmbH & Co. KG
Abteilung Kundendienst
Robert-Bosch-Breite 10
D-37079 Göttingen

Phone +49 (0) 551 604-274
Fax +49 (0) 551 604-246