Air track 195050

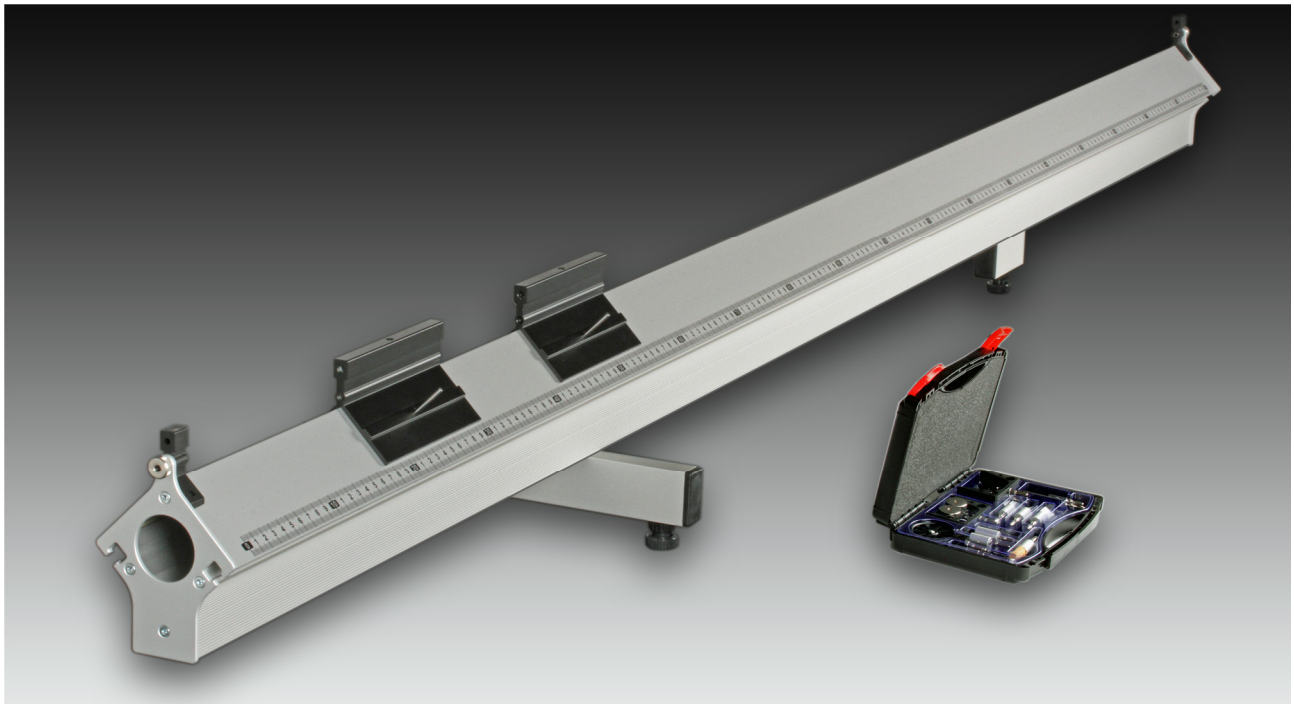

Unpacking

The air track is delivered in two packages: A large cardboard tube with the track itself and a small cardboard box.

The air track is a precision instrument and must be handled with care.
It is strongly recommended to be two persons when unpacking the track itself.

When unpacking the track, remove one plastic end plug from the cardboard tube and pull the track gently out of the tube.

The top surface must be protected against damage, since errors in this surface will increase the friction between the track and the carts.

Check the contents

The square cardboard box contains the following:

- 1 box with 1 large foot, 1 small foot, screws and an Allen key
  2 plastic end stops and 2 thumbscrews for mounting them.
- 1 box containing 2 carts.
- 1 plastic case with accessories (see below).

Mounting the feet

The two feet are screwed into square nuts running in grooves at the underside of the track.

Start with the large foot.

Move the nuts in the two *outermost* grooves towards the end that has a hole for the hose. Lay the track upright on a table with this end protruding somewhat beyond the edge.

Place one of the hexagon screws at the tip of the Allen key and put it through one of the holes in the foot. Without letting go, tighten the screw a few revolutions into the nut – but not so much that the foot cannot be displaced on the track.

Repeat with the second screw. When they both hold, temporarily tighten the screws a little more.

Shift to the other end of the track.

Attach the small foot in the same way in the two square nuts in the *middle* groove.

Final position of the feet

Even a sturdy extruded aluminium profile is slightly elastic, so the feet are therefore placed where they optimally support the track.

For a hypothetical, ideal, straight track of the length in question, model calculations gives the following ideal positions

435 mm resp. 1465 mm

as read on the scale printed on the track.

(In case the track actually has a slight net curvature, this can be counteracted by adjusting the distance between the feet.)

Mounting the end stops

The two end stops (19505006) are mounted with finger screws (19505005) as shown below.

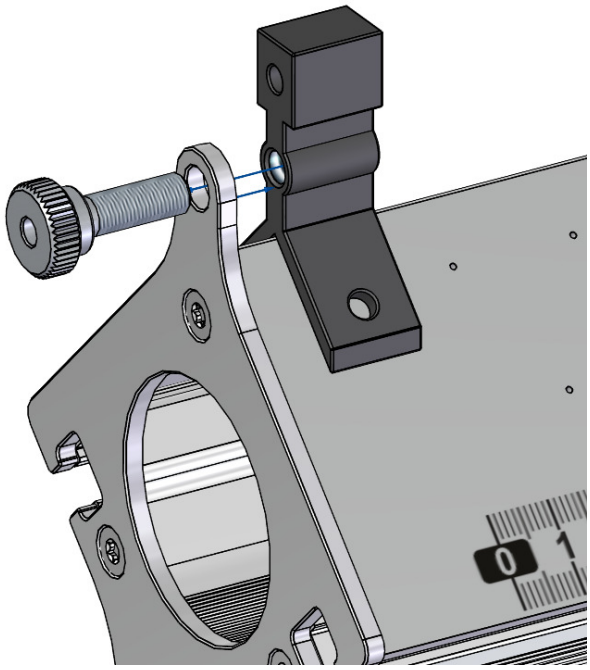

Setting up the air track

The air track should be placed on a stable table.

Connect the Air Blower (197070 or 197071 – not included) such that the hose doesn't pull strongly at the end of the track (e.g. down towards the floor).

Place a cart at the middle of the track with a 50 g weight on each side.

The track must now be adjusted horizontally by means of the knurled screws on the feet. The adjustment is made visually: The cart should remain at rest as far as possible.
The friction is so tiny that the cart very rarely can be made to stand completely still - the remaining microscopic skewness does not matter in practice.

The blower pressure should be adjusted to make the cart hover freely on the air cushion. Avoid too much pressure as this will disturb the smooth motion of the cart.

Accessories included

Apart from the previously mentioned parts that are permanently mounted on the track, the product includes 2 carts (196000) as well as a plastic case with small parts as described on the next page.

The carts weigh approximately 180 g each and are provided with two steel poles for placing weights. This way, the mass can be increased by 100 g or 200 g.

For attaching small accessory parts, the carts have 4 mm holes at the ends. These parts all weigh 10 g, and should always be used with one at each end for reasons of balance.
An un-balanced cart will "surf" on the air flow along the track.

Use preferably the two lower holes; these are closer to the centre of mass of the cart.

Experiments

Frederiksen has developed a collection of lab manuals which is continuously revised and extended.

At the time of writing, only a single experiment with the air track is represented
134720 Collisions on an air track
– but more will be added.

The experiments each have a description on our web site from which the lab manuals can be downloaded free.

Contents of the accessory case (195003)

Description	***Item No. (number)***	***Image***
Bumper fork *Bumper plate* Used in elastic collision experiments as well as at the ends of the track in order to avoid hard collisions with the end stop.	195500 (3)	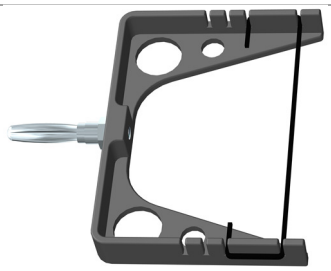
	195510 (3)	
Needle with plug *Tube with wax* Used in experiments with inelastic collisions.	195520 (1)	
	195530 (1)	
Flag with plug, 25 mm The flag is used with a photogate to define the time of passage of the cart. (Mounted in the hole at the top of the cart.)	195560 (2)	
Weight for cart, 50 g These weights are used two by two to increase the mass of one or both carts. (Used symmetrically on the cart.)	196010 (4)	
Holder with hook For fastening a wire in experiments with acceleration.	195540 (1)	
Pulley Smooth running pulley that can be placed in one of the end stops	196500 (1)	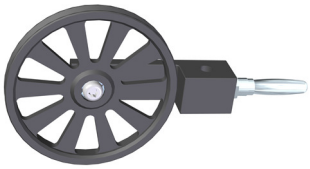
Slotted weights with holder The weights have the following masses: Plastic weights: 1 g, 1 g and 2 g Metal weights: 5 g and 10 g The holder: 2 g	196300 (1)	

More accessories for the air track

These products are purchased separately. More details can be found on our web site.

197070 Air blower for air track 230 V
197071 Air blower for air track 115 V
Blower with variable air flow, including hose that fits the air track.

197570 SpeedGate
195055 Mounting bracket for SpeedGate

New photogate with a display and functionality that previously required a separate counter or timer.

Measures e.g. both instantaneous speed and time interval between the passage of two SpeedGates.

With the included 10 mm steel rod and the mounting bracket 105055 (sold separately) the Speed Gate is easy to position on the air track.

197550 Photocell unit
200250 Electronic counter
Classic combination for timing on the air track. The photocell is mounted on a normal retort stand (not included).

195210 Electric launcher
198510 Switch box
The cart is held by an electromagnet powered through the switch box. When the current switches off the cart is released and a signal is simultaneously send to an electronic counter.

Used with a standard lab power supply (12 V DC – not included).

If an initial velocity is required there is room for a bumper fork between the cart and the magnet.

198512 Signal limiter
When using the switch box with a SpeedGate, this little box must be inserted between them – the signal voltage from the switch box is too large for the SpeedGate.

196900 Protective cover for air track
Protects the track against dust and dirt. Provided with a lead-filled edging.

196700 Air switch
Used to immediately interrupt the air flow to the air track. The carts will stop almost instantaneously when the friction suddenly increases.

196800 Adjustable end stop
Used for instance if the starting point for the cart should be variable but reproducible.
(Part of 197200 – see below.)

197200 Coupled harmonic oscillators
Up to 5 carts may be coupled together for studying harmonic oscillations or wave propagation. A single cart can be used with one or more springs in order to study a simple harmonic oscillation.

Consists of 3 extra carts (196000), 6 extra weights (196010), 6 springs, 12 holders for springs, 1 adjustable end stop (196800).